Sani Dreams

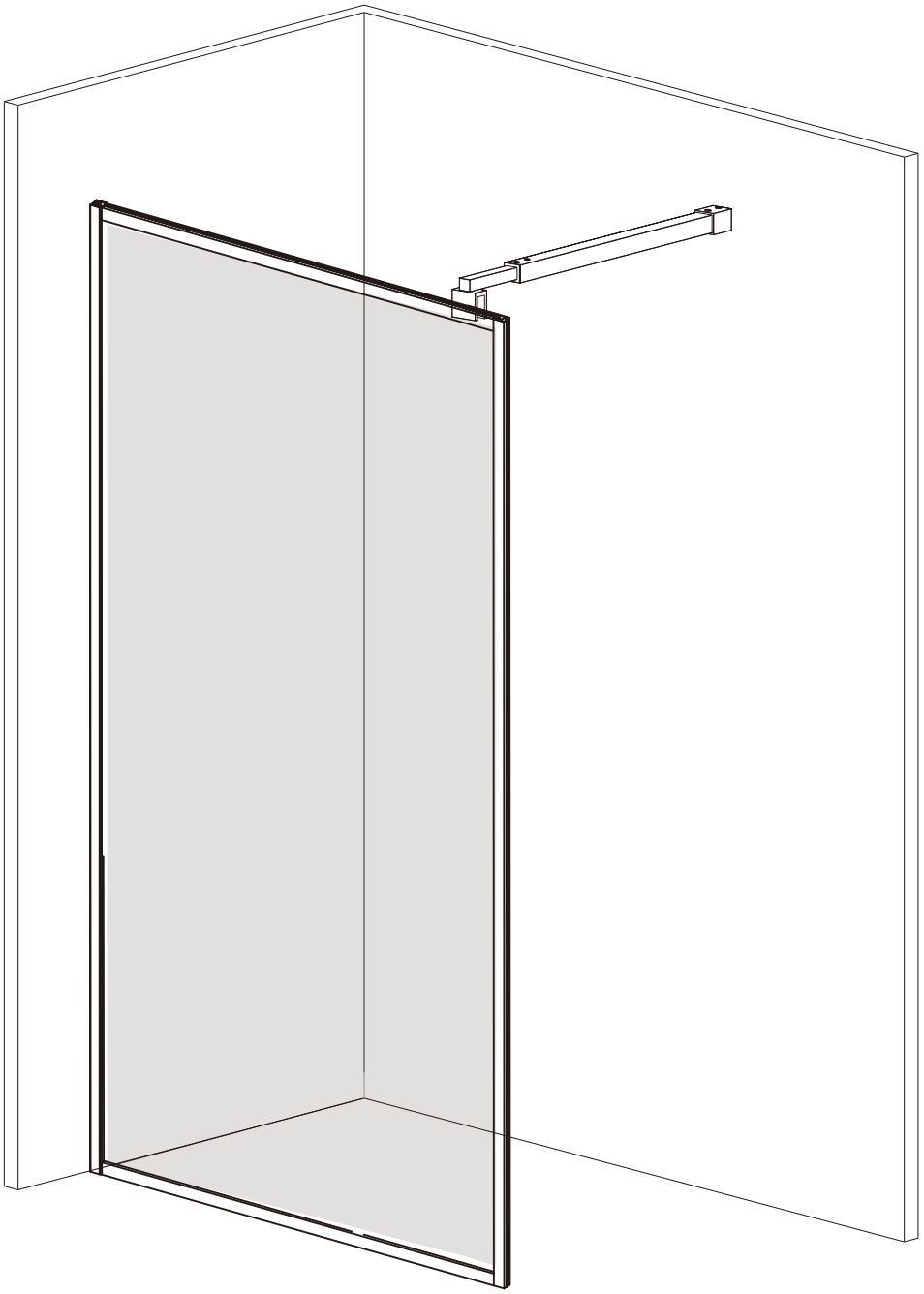

B6057A	800x2000mm
	900x2000mm
	1000x2000mm
	1200x2000mm

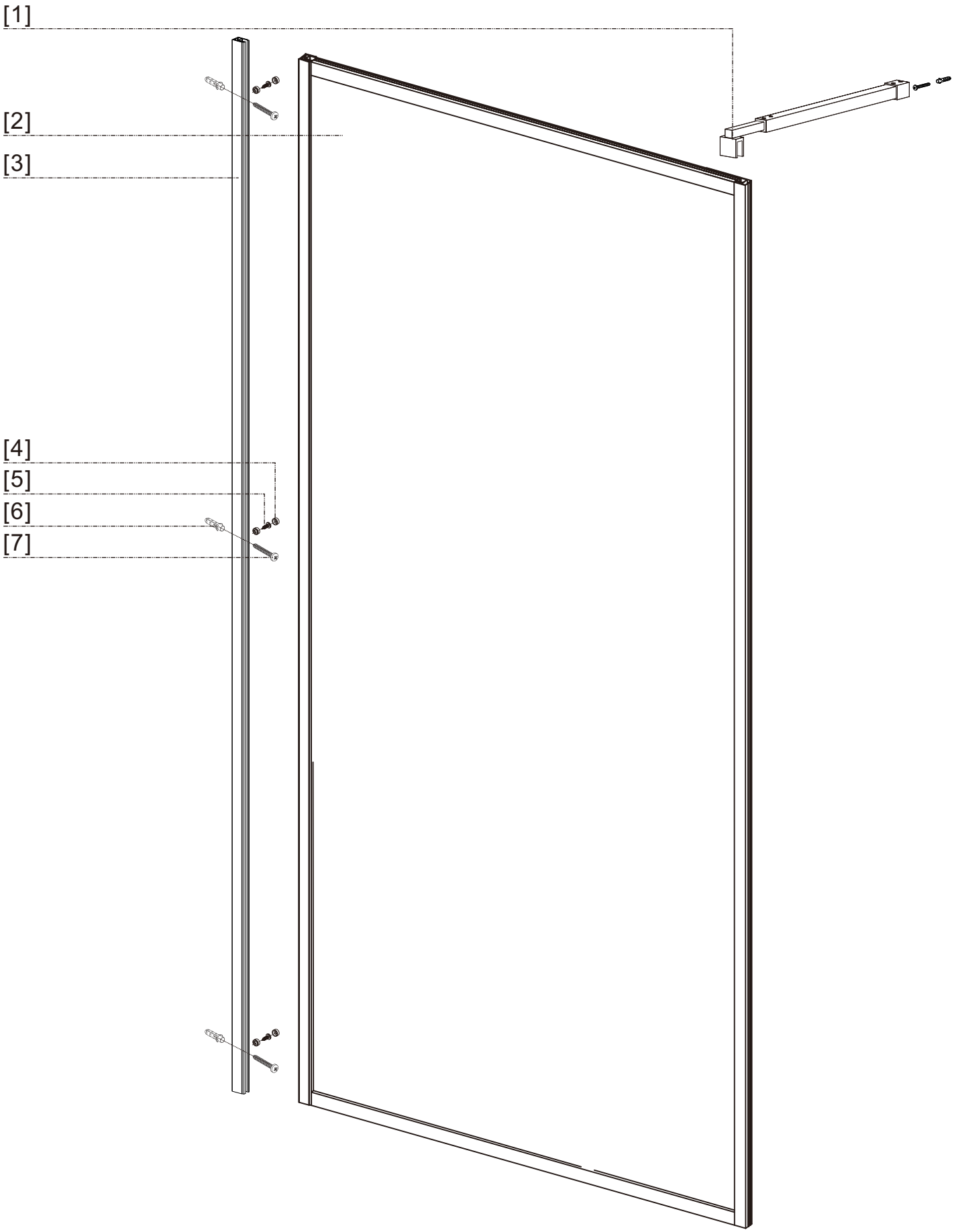
[1]
[2]
[3]
[4]
[5]
[6]
[7]

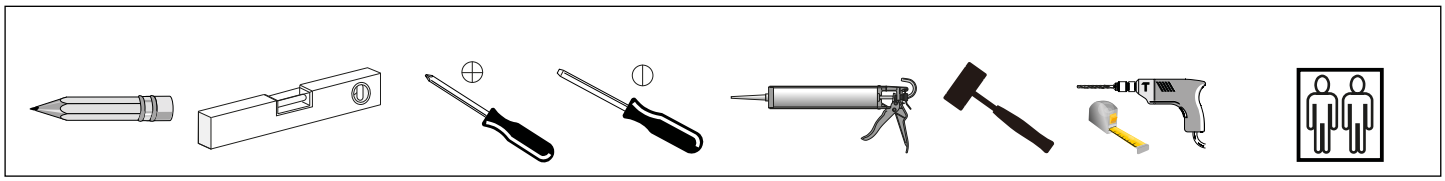

1

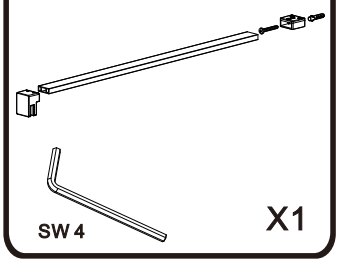

X1

2

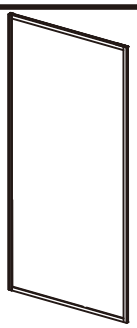

X1

3

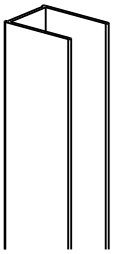

X1

4

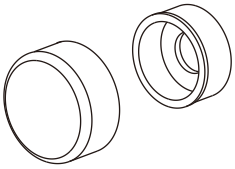

X3

5

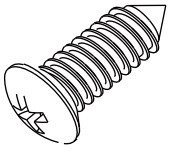

X3

6

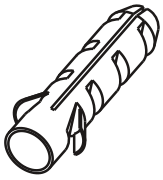

X4

7

4.2X32

X4

1

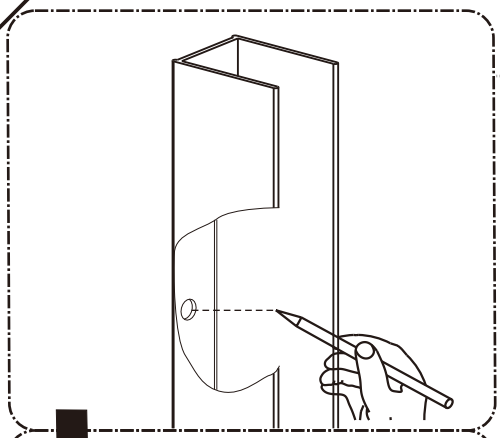

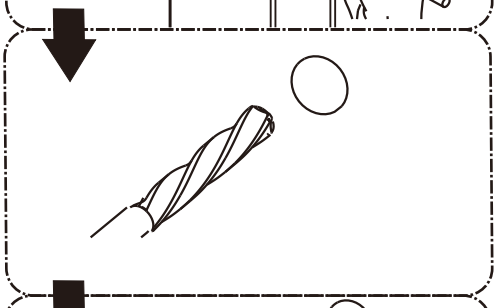

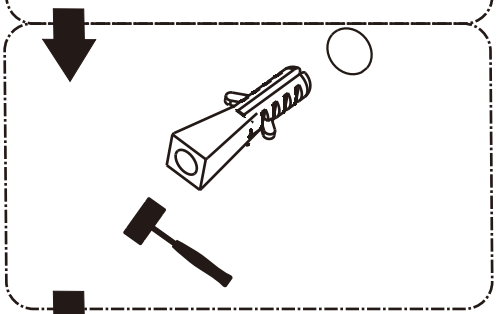

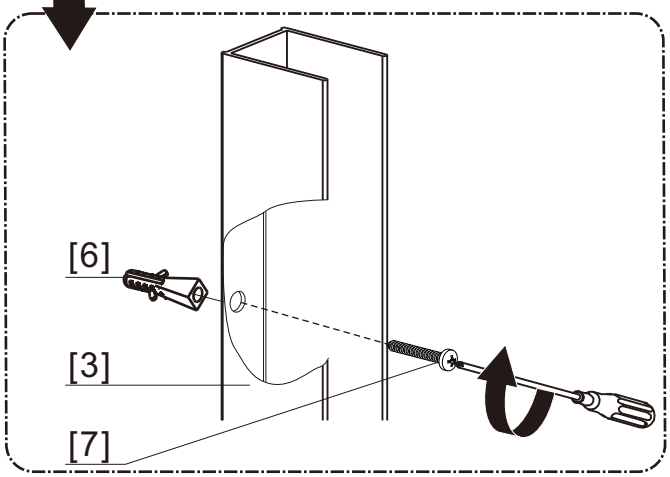

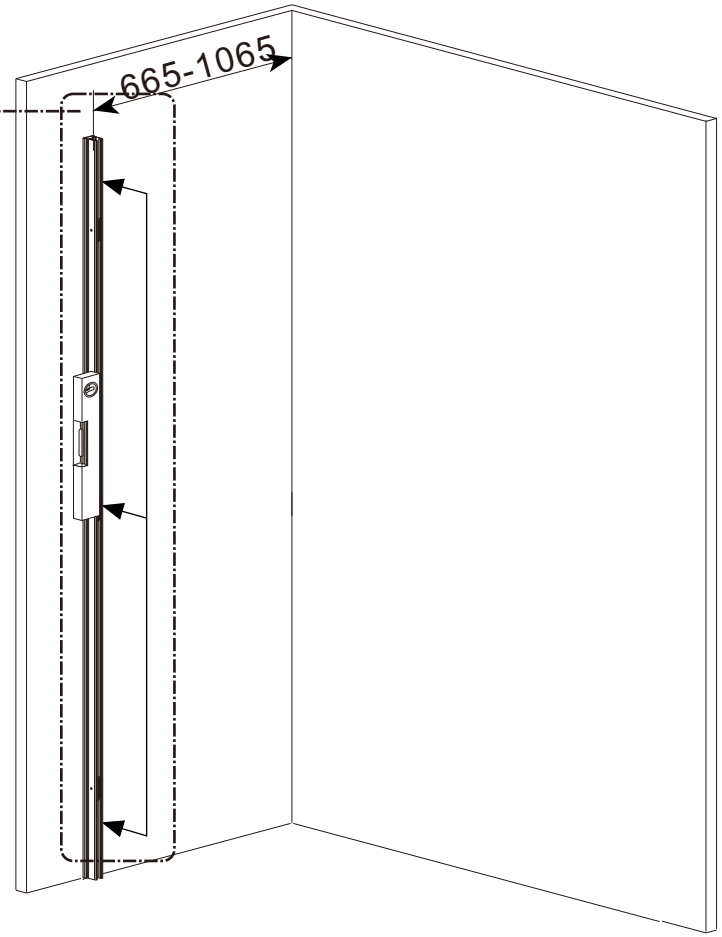

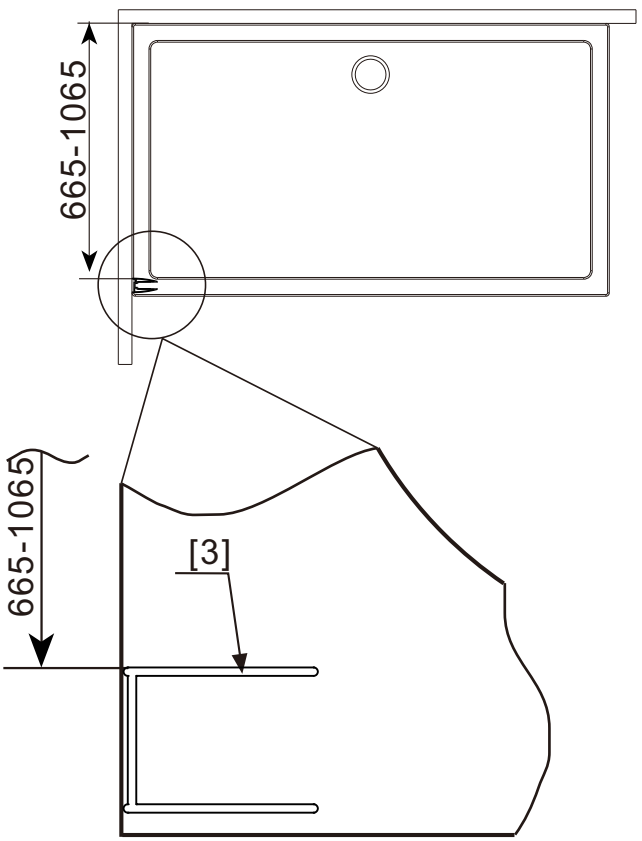

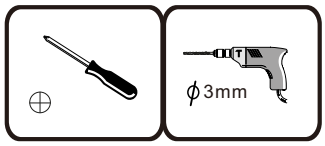

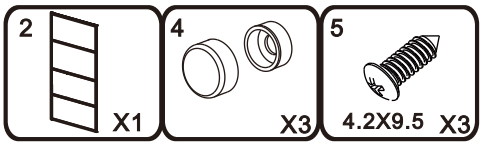

2

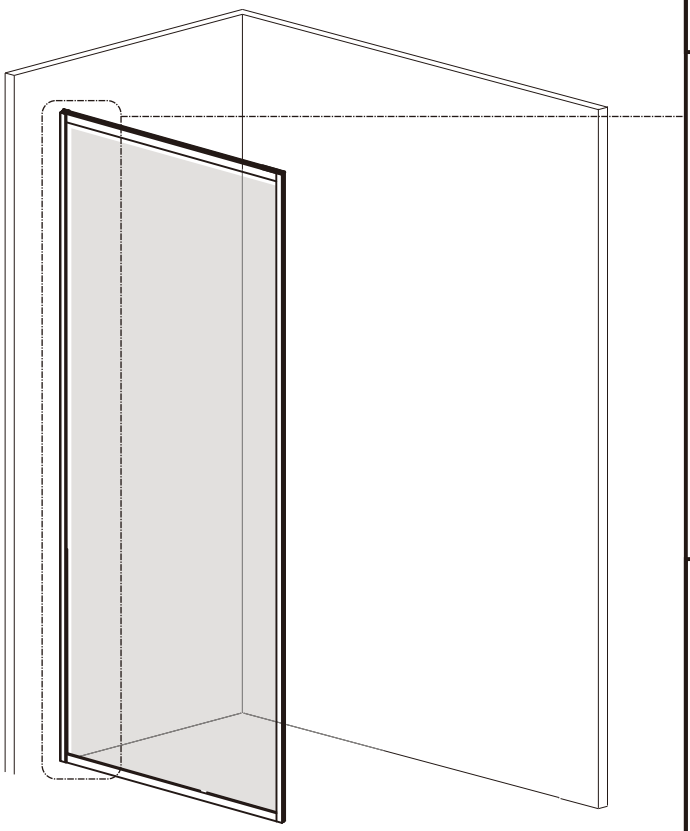

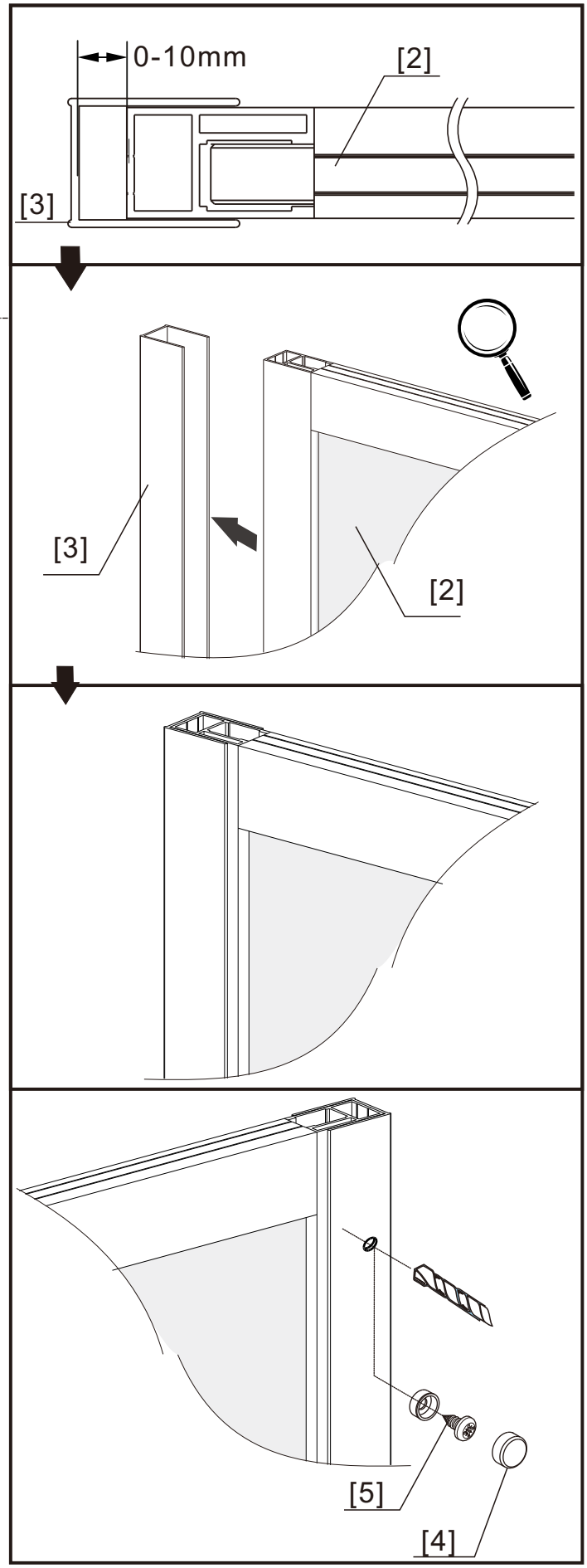

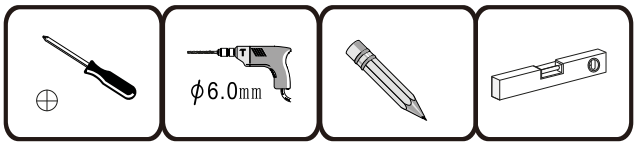

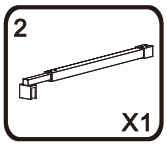

3

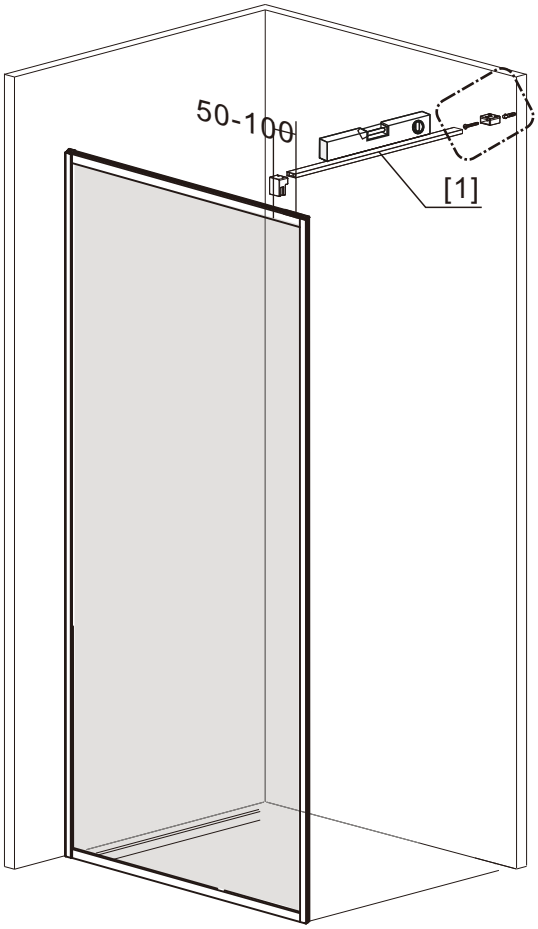

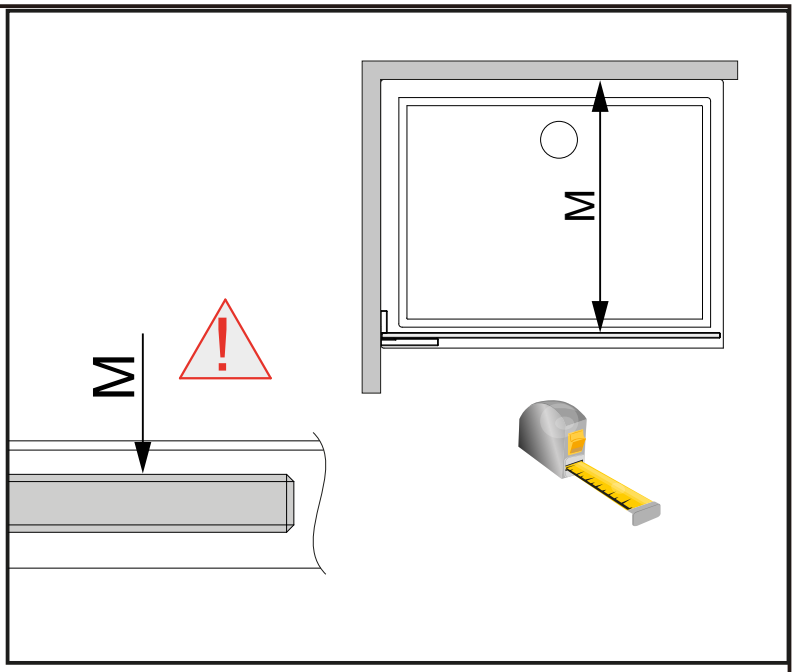

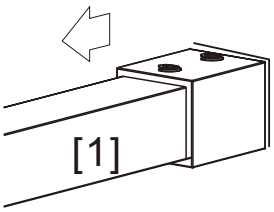

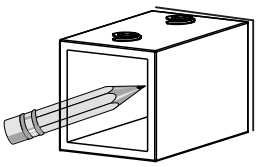

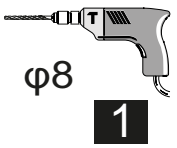

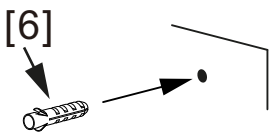

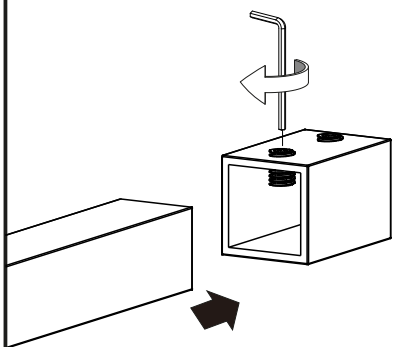

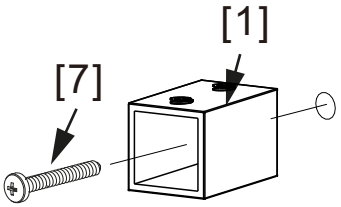

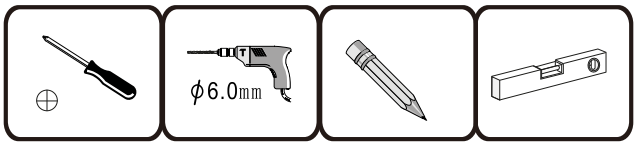
ϕ6.0mm

2
X1
6
X1
7
3.5X32
X1

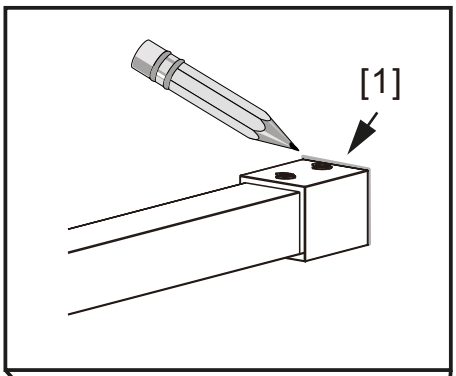
[1]

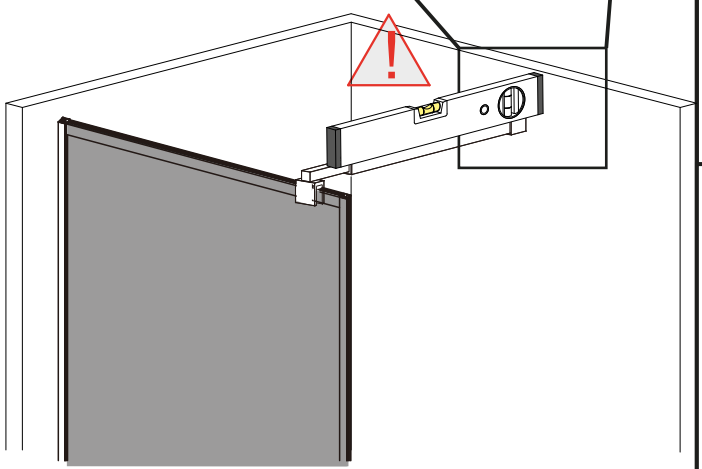

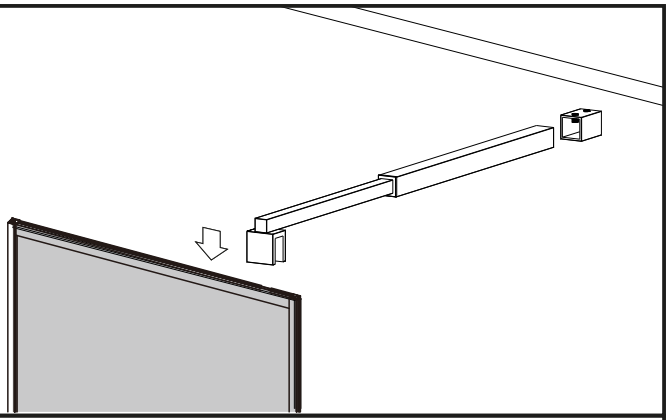

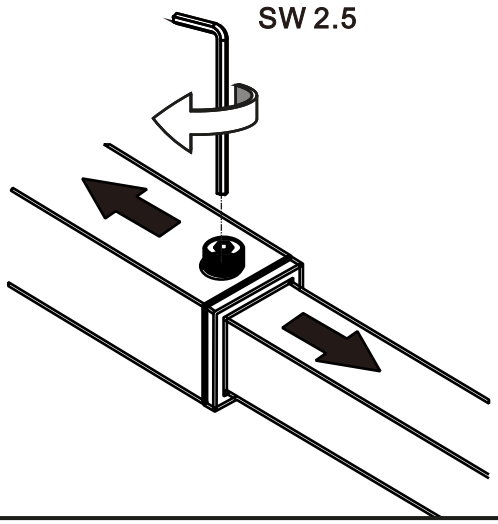
SW 2.5

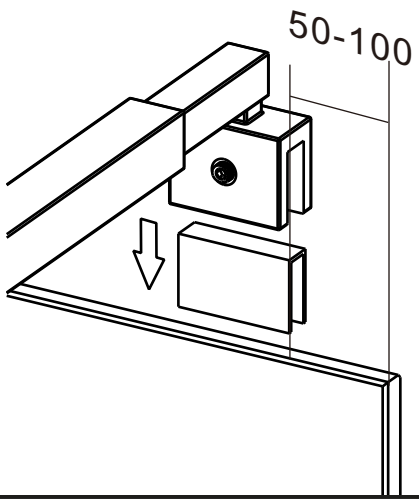
50-100

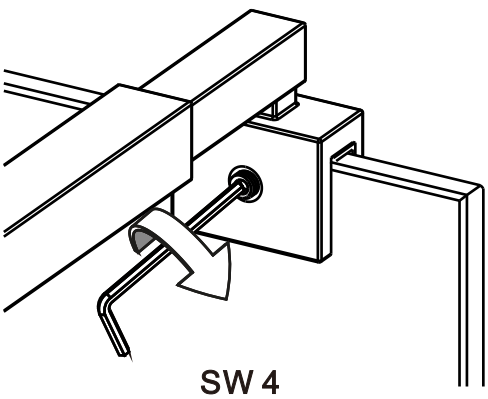
SW 4

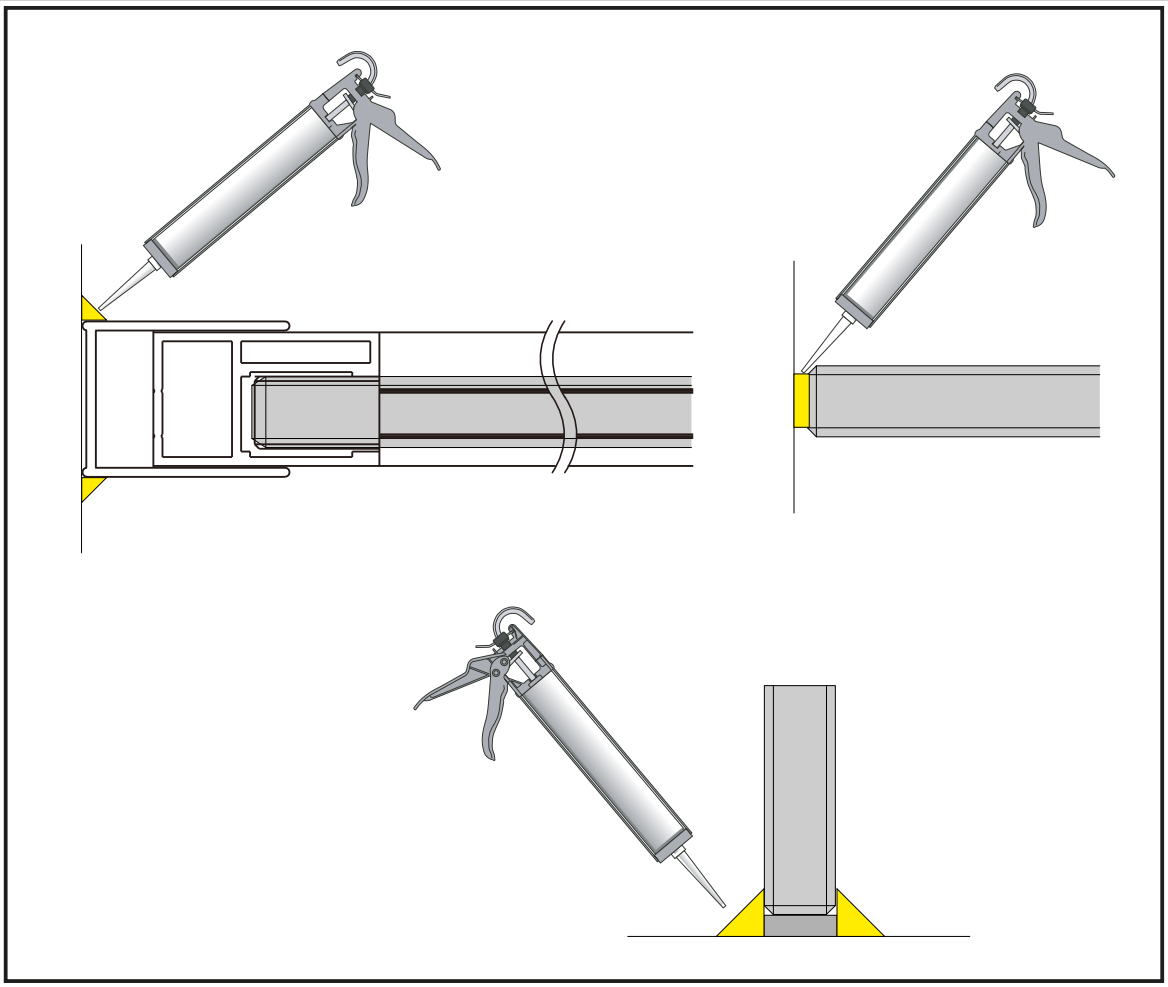

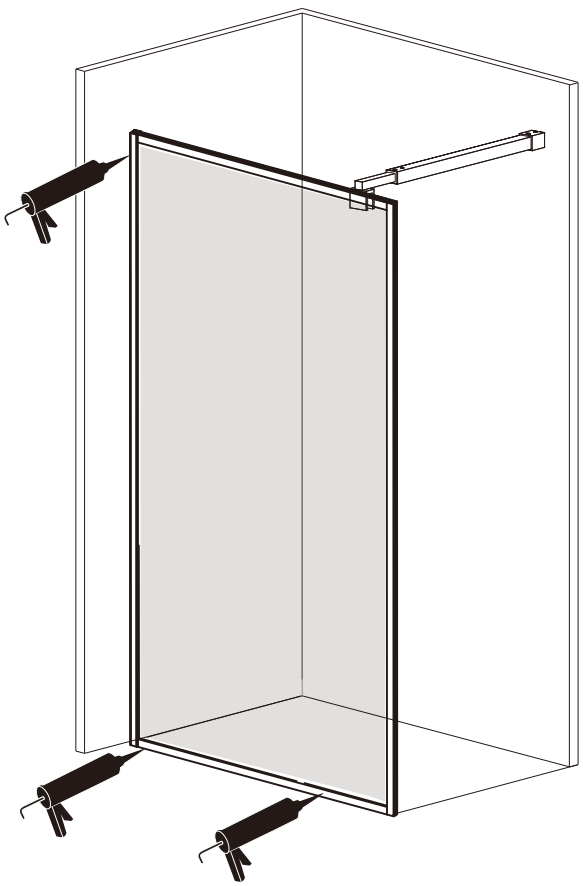
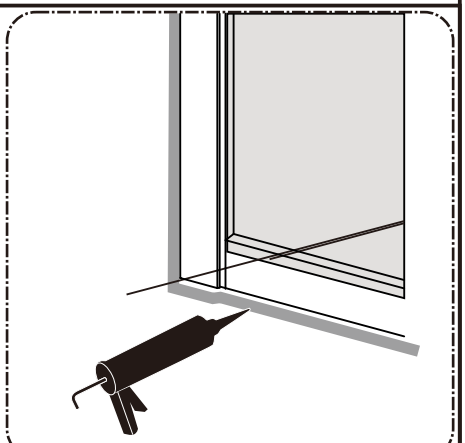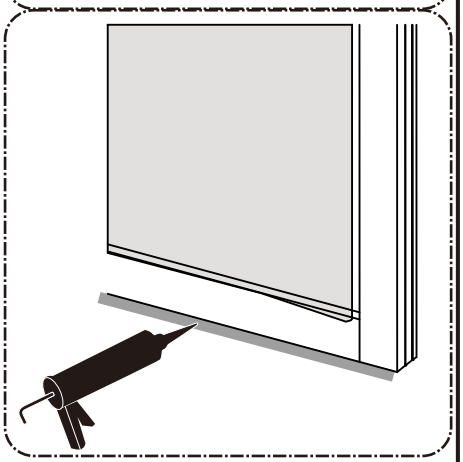
24 hour