Installation Manual

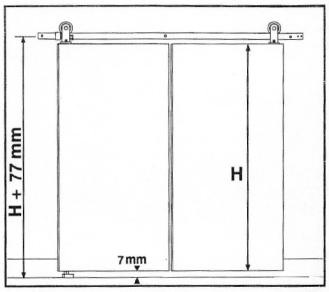

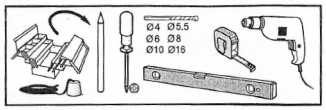

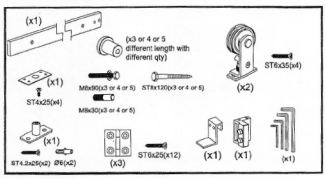

1

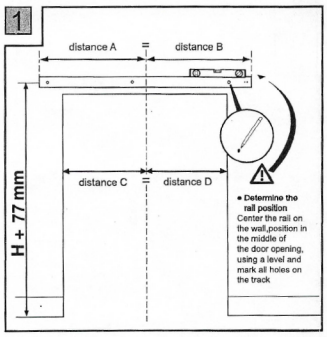

2

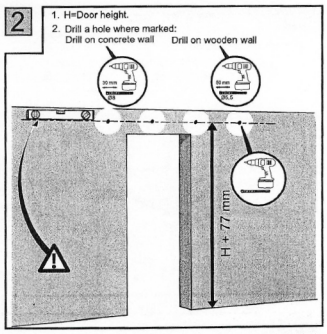

3

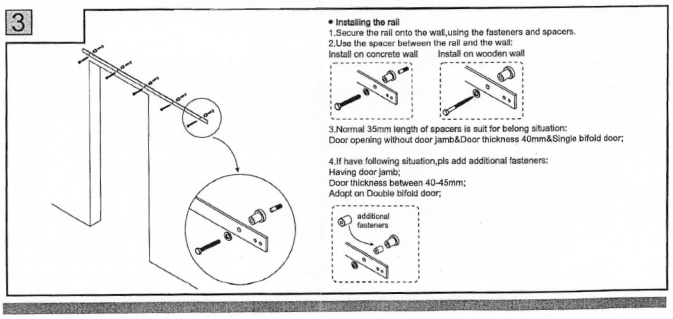

4

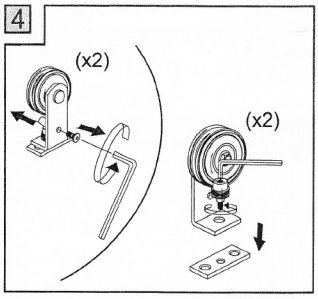

5a

For single bifold door:
Drill the holes on the top of doors following below instruction;
if you purchase the bifold door from us, our door already including following holes.

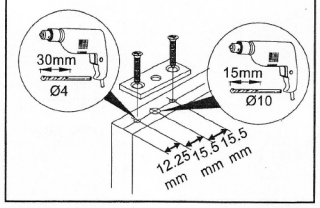

5b

For double bifold door:
Drill the holes on the top of doors following below instruction;
if you purchase the bifold door from us,the exist holes are just suit for single bifold door.
you need to drill the holes in another side of the door as following:

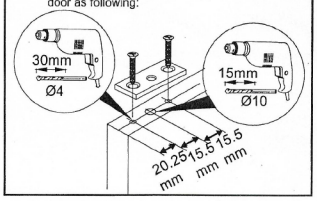

6

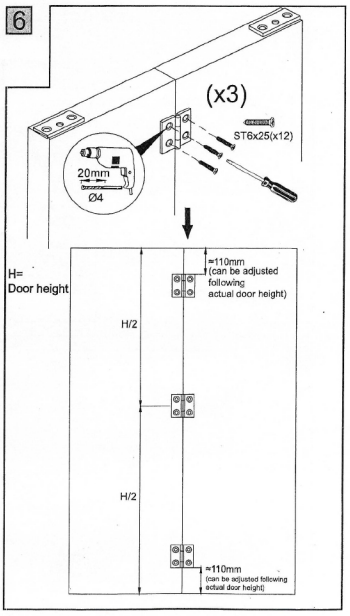

7

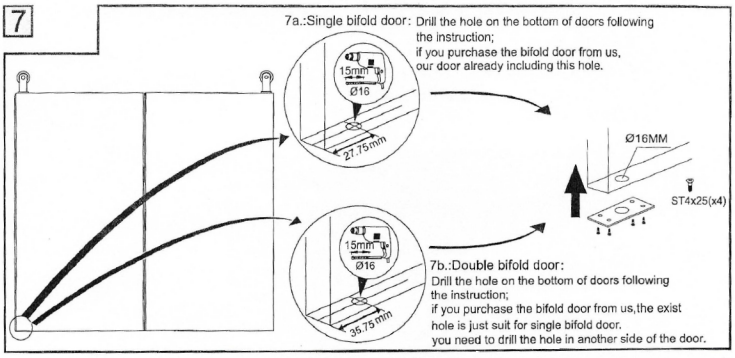

8

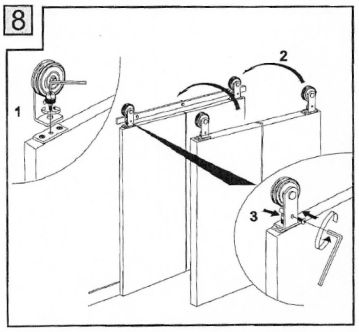

9

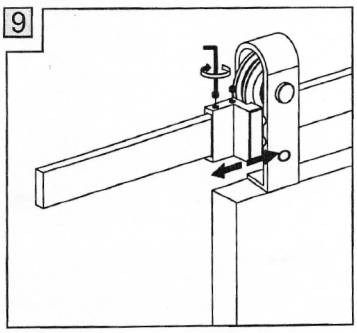

10

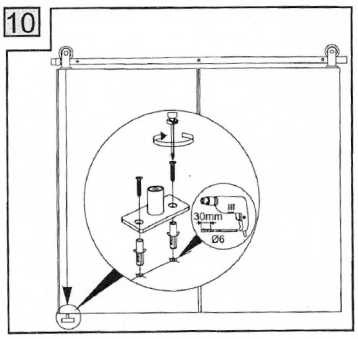

11

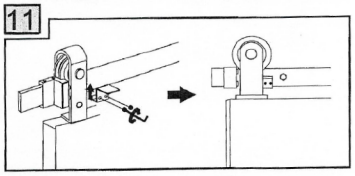

12
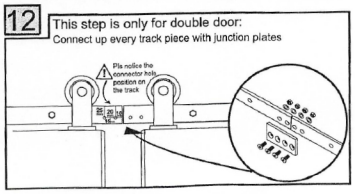
This step is only for double door:
Connect up every track piece with junction plates